REV	DESCRIPTION	DATE	ECN	CHANGE
X-1	Update Drawing	2020.06.08	————	Joe Lam
X-3	Update Drawing	2021.05.07	N(20210507)01	RENXIANG
X-4	Update Drawing	2021.05.19	————	RENXIANG

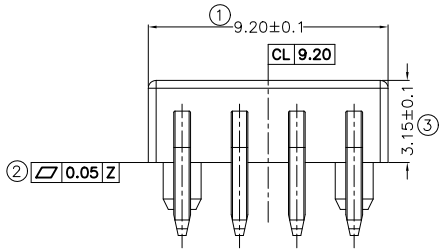

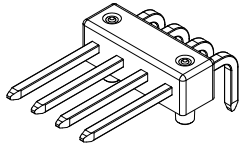

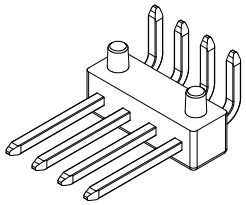

MATERIALS(材质)AND PLATING(电镀)
- TERMINALS MATERIAL:C2680-EH
  PLATING: 50~90u" TIN PLATED OVER ALL;
  70~120u" NICKEL UNDERPLATED OVERALL;
- HOUSING: PA9T BLACK UL94V-0;

ELECTRICAL PERFORMANCE(电气性能)
- DIELECTRIC WITHSTANDING VOLTAGE:500V AC.,TEST TIME:1 Min.
- CONTACT RESISTANCE:20mΩ MAX.

ENVIRONMENTAL PERFORMANCE (环境性能)
- OPERATING TEMPERATURE :-40°C TO +95°C
- STORAGE LIFE: 6 MONTHS MAX.
- SALT SPRAY TEST: 24H

MECHANICAL PERFORMANCE (机械性能)
- CONTACT RETENTION FORCE: 40N
- THE PEAK OF TEMPERATURE ON SOLDERING:THT 260±5°C 10S

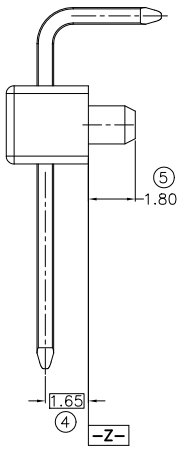

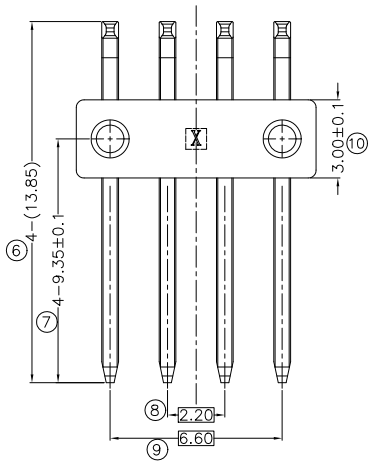

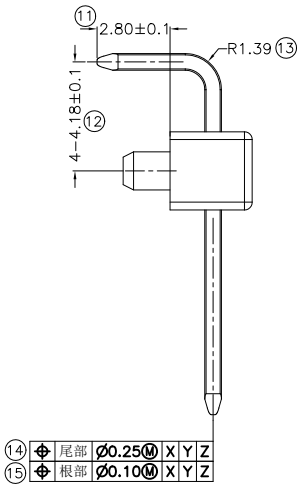

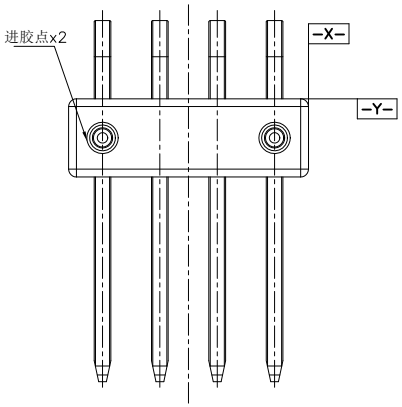

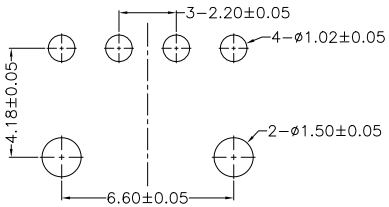

PCB Layout T=1.2mm

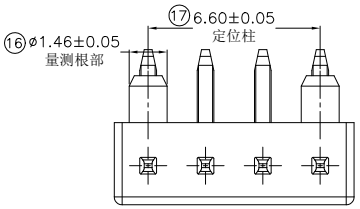

东莞市正德连接器有限公司
发行日期: 2021/05/31
受控文件发行

CZT® DONGGUAN ZHENGDE(YIHUA) CONNECTOR CO., LTD

0~1 ±0.10 >1~5 ±0.15 >5~10 ±0.20 >10~20 ±0.25 >20~45 ±0.30 >45 ±0.50	±0.5°	UNIT:	mm	DR:	REX	TITLE:	114A 4Pin排针组件	
		3RD:		DE:	LINYUE			
		SCALE:	1:1	CHKD:	WANGPEN	SHEET:	1/1	P/N: 29125D00001
CUSTOMER		REV:	X-4	APPD:	THJ	D/N:	8140-0267	M/N: